8MP Armor Dome Varifocal Camera w/ Analytics & Built-in Mic

SKU: IP8MIAD-212AI-NCV

- 2.8mm-12mm Varifocal Armor Dome
- 8MP/4K Resolution at 3840 (H) x 2160 (V)
- Color Illumination at 0.0025 LUX and 131ft IR
- Memory Card Slot up to 256GB
- IP67 Weatherproof and IK10 Vandal Resistance
- Ultra 265 Space Saving Compression

8MP / 4K IP | Smart Intrusion Prevention | People Counting | Built-In Mic

4K Resolution

4K resolution captures images four times the pixel density of 1080P which means that the finer details, such as faces or smaller items can be viewed with more detail than traditional 1080P surveillance.

Smart Intrusion Prevention

Utilizing machine learning and data intelligence, Smart Intrusion Prevention or SIP helps reduce false-alarm rates by allowing you to set up Cross Line Detection, Intrusion Detection, as well as Enter / Leave Area, all which can do any combination of human/vehicle/non-motor vehicle recognition. Smart Intrusion Prevention's detection rate of >95% helps you improve your perimeter protection, reduce false alarms while keeping you informed about the events that matter the most to you.

Edge Recording

Optional edge recording with an optional memory slot expandable up to 256GB.

People Counting

People counting is an intelligent feature that allows users to monitor and track the number of individuals entering or exiting a defined area. This is a versatile feature for various applications including retail analytics, crowd management, and security monitoring of public spaces.

Ultra Motion Detection

Utilizing machine learning and data intelligence, Ultra Motion Detection or UMD helps you filter out objects based on motion detection, detecting motion of specified object types in the image, and trigger an alarm when such motion is detected. UMD supports two different object types: Person and Vehicle. UMD provides a detection rate of >90% up to 49ft and is more efficient than traditional motion detection, further reducing false-alarms. Ultra Motion Detection can be configured to your full screen or specific area(s) for detection.

Built-in Mic

The IP8MIAD-212AI-NCV comes with a built-in mic to help give you even more protection than a traditional still video.

Spec Sheet: IP8MIAD-212AI-NCV

8MP Armor Dome Varifocal Camera w/ Analytics & Built-in Mic

ANR Technology

The IP8MIAD-212AI-NCV when connected to an ANR compatible Network Video Recorder will automatically store video data on the internal memory card when the network is disconnected. After recovery to the network, the NVR automatically retrieves the video data stored on the camera.

Up To 131FT IR Distance

TheIP8MIAD-212AI-NCV is capable of producing a stunningly clear, colorful video with low illuminance enhancement for darker environments. In the darkest environments, on board IR illumination kicks in. TheIP8MIAD-212AI-NCV provides clear video capture in both day and night with high definition video output.

Crowd Density

With deep learning algorithm, the IP8MIAD-212AI-NCV can detect the crowd density on the image, and display it on heat map; it can detect people quantity and density in selected area and set threshold. When the number or density is larger or smaller than the threshold, it triggers linkage.

Wide Dynamic Range

The camera achieves vivid images, even in the most intense contrast lighting conditions, using industry-leading wide dynamic range (WDR) technology. For applications with both bright and low lighting conditions that change quickly, True WDR (120 dB) optimizes both the bright and dark areas of a scene at the same time to provide usable video.

ULTRA 265 Compression

Utilizing H.265 advanced video encoding, provides high-quality video while reducing the storage space needed to retain your video events. Users can add their own memory card to take advantage of its edge recording capabilities.

Commercial Grade Equipment

Built for endurance, this all metal housing is rated IP67, which means it is protected from water and dust but is also vandal proof resistant rating of IK10. Mount this camera anywhere with it's 3-axis cable management bracket. Additional junction boxes and brackets are available for additional installation options, and help further protect your cables and connections.

NDAA Compliance

The John S. McCain National Defense Authorization Act (NDAA) is a United States federal law which specifies the budget, expenditures and policies of the U.S. Department of Defense. For Fiscal Year 2019, the NDAA Section 889, prohibits the U.S. government from procuring video and telecommunication equipment from certain Chinese companies and their subsidiaries. Some non government projects may require NDAA compliance if federal funding is being used.

Product Specifications

CAMERA	
Sensor	1/2.8", 8.0 megapixel, progressive scan, CMOS
Min. Illumination	Color: 0.0025 lux (F1.6, AGC ON) 0 lux with IR on
Day / Night	IR-cut filter with auto switch (ICR)
Shutter	Auto / Manual, 1 ~ 1/100000s
Adjustment Angle	Pan: 0° ~ 355° Tilt: 0° ~ 80° Rotate: 0° ~ 355°
WDR	120dB
S/N	>52dB

LENS	
Lens	2.8 ~ 12mm, AF automatic focusing and motorized zoom lens
Iris Type	Fixed
Field of View (H)	107.4°~ 29.2°
Field of View (V)	54.2°~ 16.3°
Field of View (D)	111.0°~33.1°

DORI	
Lens	2.8mm, 12mm
Detect	285.1ft, 1221.7ft
Observe	114.1ft, 488.8ft
Recognize	57ft, 244.4ft
Identify	28.5ft, 122ft

Spec Sheet: IP8MIAD-212AI-NCV

8MP Armor Dome Varifocal Camera w/ Analytics & Built-in Mic

Product Specifications Cont.

ILLUMINATOR	
IR Range	131.2 ft
Wavelength	850 nm
IR On / Off Control	Auto / Manual

VIDEO	
Video Compression	Ultra 265, H.265, H.264, MJPEG
H.264 Code Profile	Baseline profile, Main profile, High profile
Frame Rate	Main Stream: 8MP (3840 * 2160), Max 20fps;5MP (3072 * 1728), Max 30fps; 4MP (2560 * 1440), Max30fps; 1080P (1920 * 1080), Max 30fps; Sub Stream: 1080P (1920 * 1080), Max 30fps;720P (1280 * 720), Max 30fps; D1 (720 * 576), Max 30fps; 640 * 360,Max 30fps; 2CIF(704 * 288), Max 30fps; CIF(352 * 288), Max 30fps; Third Stream: D1 (720 * 576), Max 30fps; 640 * 360,Max 30fps; 2CIF(704 * 288), Max 30fps; CIF(352 * 288), Max 30fps;
Video Bit Rate	128 Kbps~16 Mbps
U-code	Support
OSD	Up to 8 OSDs
Privacy Mask	Up to 4 areas
ROI	Up to 8 areas
Video Stream	Triple Streams

IMAGE	
White Balance	Auto / Outdoor / Fine Tune / Sodium Lamp / Locked / Auto2
Digital Noise Reduction	2D / 3D DNR
Smart IR	Support
Flip	Normal / Vertical / Horizontal / 180° / 90°Clockwise / 90°Anti-clockwise
Dewarping	Support
HLC	Support
BLC	Support
Defog	Digital Defog

INTELLIGENT	
Smart Intrusion Prevention	Support False Alarm Filtering: Cross Line Detection, Intrusion Detection, Enter Area Detection, Leave Area Detection
Statistical Analysis	People Counting, Support People Flow Counting And Crowd Density Monitoring

EVENTS	
Basic Detection	Motion detection, Ultra motion detection, Tampering alarm, Audio detection
General Function	Watermark, IP Address Filtering, Tampering Alarm, Alarm Input, Alarm Output, Access Policy, ARP Protection, RTSP Authentication, User Authentication

AUDIO	
Audio Compression	G.711
Audio Bitrate	64 Kbps
Two-way audio	Support
Suppression	Support
Sampling Rate	8KHZ

STORAGE	
Edge Storage	Memory Card Slot up to 256GB
Network Storage	ANR, NAS(NFS)

NETWORK	
Protocols	IPv4, IPv6,IGMP, ICMP, ARP, TCP, UDP, DHCP, PPPoE, RTP, RTSP, RTCP, DNS, DDNS, NTP, FTP, UPnP, HTTP, HTTPS, SMTP, 802.1x, SNMP, QoS, RTMP,SSL/TLS, SSH
Compatible Integration	ONVIF (Profile S, Profile G, Profile T), API,SDK
User/Host	Up to 32 users. 2 user levels: administrator and common user
Security	Password Protection, Strong Password, HTTPS Encryption, Export Operation Logs, Basic and Digest Authentication for RTSP, Digest Authentication for HTTP, TLS 1.2, WSSE and Digest Authentication for ONVIF
Client	Optiview VMSN, Optiview VMSN Mobile, Optiview Cloud VCS
Web Browser	Plug-in required live view: IE 10 and above, Chrome 45 and above, Firefox 52 and above, Edge 79 and above Plug-in free live view: Chrome 57.0 and above, Firefox 58.0 and above, Edge 16 and above

INTERFACE	
Audio I/O	Input: impedance 35kΩ; amplitude 2V [p-p] Output: impedance 600Ω; amplitude 2V [p-p]

Spec Sheet: IP8MIAD-212AI-NCV

8MP Armor Dome Varifocal Camera w/ Analytics & Built-in Mic

Product Specifications Cont.

INTERFACE CONT.	
Alarm I/O	1/1
RS485	N/A
Built-in Mic	Support
Built-in Speaker	N/A
WIFI	N/A
Network	1 * RJ45 10M/100M Base-TX Ethernet
Video Output	N/A

CERTIFICATIONS	
EMC	CE-EMC (EN 55032: 2015+A1:2020,EN 61000-3-3: 2013+A1: 2019,EN IEC 61000-3-2: 2019+A1: 2021,EN 55035: 2017+A11:2020) FCC (FCC CFR 47 part15 B, ANSI C63.4-2014)
Safety	CE LVD (EN 62368-1:2014+A11:2017) CB (IEC 62368-1:2014) UL (UL 62368-1, 2nd Ed., Issue Date: 2014-12-01)

CERTIFICATIONS CONT.	
Environment	CE-RoHS (2011/65/EU;(EU)2015/863); WEEE (2012/19/EU); Reach (Regulation (EC) No 1907/2006)
Protection	IP67 (IEC 60529:1989+AMD1:1999+AMD2:2013) IK10 (IEC 62262:2002)

GENERAL	
Power	DC 12V±25%, PoE (IEEE 802.3af) Power consumption: Max 9.0W
Power Interface	Ø 5.5mm coaxial power plug
Dimensions (Ø x H)	Ø5.8” x 4.4”
Weight	2.14lb
Material	Metal
Working Environment	-22°F ~ 140°F, Humidity: ≤95% RH (non-condensing)
Storage Environment	-22°F ~ 140°F, Humidity: ≤95% RH (non-condensing)
Surge Protection	6KV
Reset Button	Support

Additional Products

OPTIVIEW’s VIDEO MONITORING SOFTWARE
Remote Monitoring

NVR16P16-2B-NCV
16MP 16 Channel 16 PoE 1U NVR w/ Analytics

IP8MIAB-212-NCV
8MP Varifocal Armor Ball IP Camera w/ Analytics

IP8MIBC-212-NCV
8MP Varifocal IP Bullet Camera w/ Analytics

IP12F-NCV
12MP Ultra HD Fixed Fisheye Camera

Compatible Brackets

BKT-08
Junction Box for Network NDAA Armor Dome

BKT-10
Wall Mount w/ Junction Box for NCV Cameras

Mounting Options

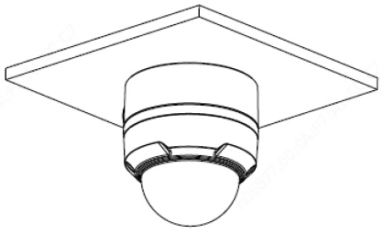

Ceiling Mount

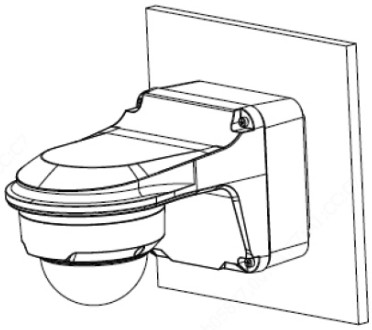

Wall Mount
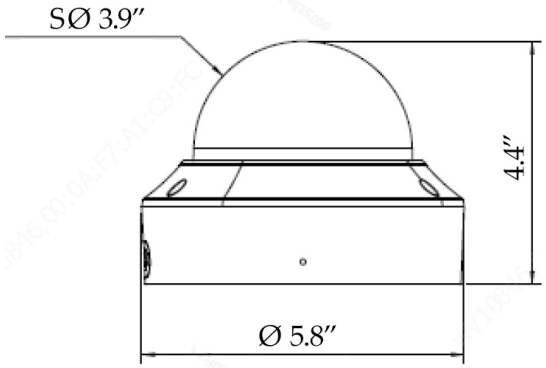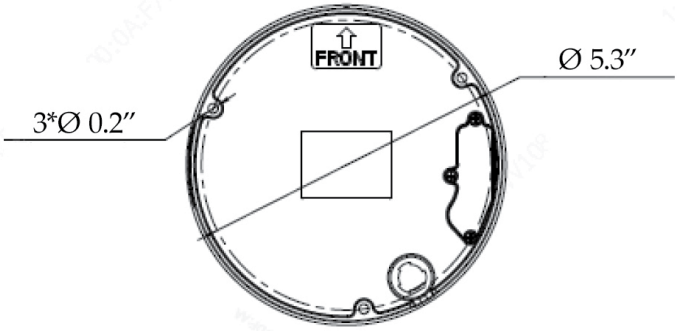
Dimensions