IP12F-NCV

12 MP Ultra HD Fixed Fisheye Camera

12MP 4K IP

Capture HD video footage with 12MP IP 1.8MM fixed focus lens with a maximum aperture of F2.0

Dewarp

Fully dewarp Fisheye and 360° Panoramic cameras on the native NVR in both live and playback mode

Smart Intrusion Prevention

Accurately reduce false alarms with custom zones with human and vehicle detection.

Heat Map

This camera using deep learning algorithms, reports number of people and average stand time.

Built-In Audio

The camera comes with an audio input cable to help you get even more data from every device.

4K RESOLUTION

4K resolution captures images four times the pixel density of 1080P which means that the finer details, such as faces or smaller items can be viewed with more detail than traditional 1080P surveillance.

WIDE DYNAMIC RANGE

The camera achieves vivid images, even in the most intense contrast lighting conditions, using industry-leading wide dynamic range (WDR) technology. For applications with both bright and low lighting conditions that change quickly, True WDR (120 dB) optimizes both the bright and dark areas of a scene at the same time to provide usable video.

FISHEYE DEWARPING

The IP12F-NCV gives you the ability to dewarp a 360° panoramic camera in realtime or in playback gives the user a much larger variety of views to choose from when live monitoring, or after an event occurs. You have 9 modes to choose from, and the perspective of the camera can be adjusted for ceiling, wall, or counter top installation.

SMART INTRUSION PREVENTION

Utilizing machine learning and data intelligence, Smart Intrusion Prevention or SIP helps reduce false-alarm rates by allowing you to set up Cross Line Detection, Intrusion Detection, as well as Enter / Leave Area, all which can do any combination of human/vehicle/non-motor vehicle recognition. Smart Intrusion Prevention's detection rate of >95% helps you improve your perimeter protection, reduce false alarms while keeping you informed about the events that matter the most to you.

IP12F-NCV

12 MP Ultra HD Fixed Fisheye Camera

NDAA COMPLIANCE

The John S. McCain National Defense Authorization Act (NDAA) is a United States federal law which specifies the budget, expenditures and policies of the U.S. Department of Defense. For Fiscal Year 2019, the NDAA Section 889, prohibits the U.S. government from procuring video and telecommunication equipment from certain Chinese companies and their subsidiaries. Some non government projects may require NDAA compliance if federal funding is being used.

HEAT MAP

The IP12F-NCV supports heat map reporting for number of people and average strand time. You can observe customer's regions of interest from two aspects: number of people and time.

ANR TECHNOLOGY

The IP12F-NCV when connected to an ANR compatible Network Video Recorder will automatically store video data on the internal memory card when the network is disconnected. After recovery to the network, the NVR automatically retrieves the video data stored on the camera.

EDGE RECORDING

Optional edge recording with an optional memory slot expandable up to 256GB.

BUILT-IN AUDIO

The IP12F-NCV comes with a built-in mic to help give you even more protection than a traditional still video.

COMMERCIAL GRADE EQUIPMENT

Built for endurance, this all metal housing is rated IP67, which means it is protected from water and dust but is also vandal proof resistant rating of IK10. Mount this camera anywhere with it's 3-axis cable management bracket. Additional junction boxes and brackets are available for additional installation options, and help further protect your cables and connections.

PRODUCT SPECIFICATIONS

CAMERA	
Sensor	1 / 1.7", 12.0 Megapixel, Progressive Scan, CMOS
Minimum Illumination	Colour: 0.03 Lux (F2.0, AGC On) 0 Lux with IR
Day / Night	IR - Cut Filter with Auto Switch (ICR)
Shutter	Auto / Manual, Shutter Time: 1 - 1 / 100,000s
WDR	DWDR
S / N	> 52 dB

LENS	
Lens Type	1.8mm @ F2.0
Field of View	360°
DORI Distance	Detect: 143.7"; Observe: 57.4"; Recognize: 28.9"; Identify: 14.4"

ILLUMINATOR	
IR Range	Up to 49 ft
Wavelength	850 nm
IR On / Off Control	Auto / Manual

VIDEO	
Compression	Ultra265, H.265, H.264, MJPEG
H.264 Code Profile	Baseline Profile, Main Profile, High Profile
Main Stream	Fisheye View: 12MP (4000 * 3000) @ 20fps; 3000 * 3000 @ 20fps; 2560 * 2560 @ 25fps; Panorama View: 12MP (4000 * 3000) @ 20fps; 3000 * 2000 @ 20 / 25fps; 3000 * 1500 @ 20 / 25fp; PTZ View: 1920 * 1080 @ 20 / 25fps;
Sub Stream	Fisheye View: 2000 * 1500 @ 20fps; 2000 * 2000 @ 25fps
Third Stream	Fisheye View: D1 (720 * 576) @ 20 / 25fps; CIF352 * 288 @ 20 / 25fps;
Video Bit Rate	128 Kbps - 16 Mbps
U - Code	Support
OSD	Up to 8 OSDs
Privacy Mask	Up to 4 Areas
ROI	Up to 8 Areas
Video Stream	Triple Streams

IP12F-NCV

12 MP Ultra HD Fixed Fisheye Camera

PRODUCT SPECIFICATIONS CONT.

LIVE VIEW DISPLAY	
Mount Type	Support Type, Wall, and Ceiling
Hardware Decoding	Ceiling Mount: Fisheye View, Fisheye + 4PTZ, Horizontal Panorama View, Vertical Panorama View Table Mount: Fisheye View, Fisheye + 4PTZ, Horizontal Panorama View, Vertical Panorama View Wall Mount: Fisheye View, Fisheye + 4PTZ Panorama View
Software Decoding	Ceiling Mount: Fisheye View, 360° Panorama + 1PTZ, 180° Panorama View, Fisheye + 3PTZ, Fisheye + 4PTZ, Fisheye + 8PTZ, 360° Panorama + 6PTZ Table Mount: Fisheye View, 360° Panorama + 1PTZ, 180° Panorama View, Fisheye + 3PTZ, Fisheye + 4PTZ, Fisheye + 8PTZ, 360° Panorama +6PTZ Wall Mount: Fisheye View, 180° Panorama View, 180° Panorama View + 3PTZ, 180° Panorama View +4PTZ, 180° Panorama View + 8PTZ

IMAGE	
White Balance	Auto / Outdoor / Fine Tune / Sodium Lamp / Locked / Auto 2
Digital Noise Reduction	2D / 3D DNR
Smart IR	Support
Flip	Normal / Flip Vertical / Flip Horizontal / 180°
Dewarping	N / A
HLC	N / A
BLC	Support
Defog	Digital Defog

INTELLIGENCE	
Perimeter Protection	Cross Line Detection, Intrusion Detection
Statistical Analysis	Heat Map (Working with Management Platform)

EVENTS	
Basic Detection	Motion Detection, Audio Detection, Tampering Alarm
General Function	Watermark, IP Address Filtering, Tampering Alarm, Alarm Input, Alarm Output, Access Policy, ARP Protection, RTSP Authentication, User Authentication

AUDIO	
Audio Compression	G.711U, G.711A
Audio Bit Rate	64 Kbps
Two-Way Audio	Support
Suppression	Support
Sampling Rate	8KHZ

STORAGE	
Edge Storage	Optional Memory Card, Up to 256 GB
Network Storage	ANR, NAS (NFS)

NETWORK	
Protocols	IPv4, IPv6, IGMP, ICMP, ARP, TCP, UDP, DHCP, PPPoE, RTP, RTSP, RTCP, DNS, DDNS, NTP, FTP, UPnP, HTTP, HTTPS, SMTP, 802.1x, SNMP, QoS
Compatible Integration	ONVIF (Profile S, Profile G, Profile T), API, SDK
User / Host	Up to 32 Users. 3 User Levels: Administrator, Common User and Operator
Client	Optiview VMSN and VMSN Mobile
Web Browser	Plug-In Required Live View: IE 10 and Above, Chrome 45 and Above, Firefox 52 and Above, Edge 79 and Above

INTERFACE	
Audio I / O	Input: Impedance 35k Ω; Amplitude 2V [p - p] Output: Impedance 600k Ω; Amplitude 2V [p - p]
Alarm I / O	2 / 1, Multiple Alarm Linkage Editable
Built-In Mic	Two Mics
Built-In Speaker	Support
Serial	1 Channel RS485 Interface
Network	1 RJ45 10M / 100M Base-TX Auto-Adaptive Ethernet
Video Output	1 BNC, Impedance 75 Ω; Amplitude 1V [p - p]

IP12F-NCV

12 MP Ultra HD Fixed Fisheye Camera

PRODUCT SPECIFICATIONS CONT.

CERTIFICATIONS	
EMC	CE-EMC (EN 55032: 2015 + A1: 2020, EN 61000-3-3: 2013 + A1: 2019, EN IEC 61000-3-2: 2019 + A1: 2021, EN 55035: 2017 + A11: 2020) FCC (FCC CFR 47 part 15 B, ANSI C63.4-2014)
Safety	CE LVD (EN 62368-1: 2014 + A11: 2017) CB (IEC 62368-1: 2014) UL (UL 62368-1, 2nd Ed., Issue Date: 2014-12-01)
Environment	CE-RoHS (2011 / 65 / EU; (EU) 2015 / 863); WEEE (2012 / 19 / EU); Reach (Regulation (EC) No 1907 / 2006)
Protection	IP67 (IEC 60529: 1989 + AMD1: 1999 + AMD2: 2013) IK10 (IEC 62262: 2002)

GENERAL	
Power	DC 12V ±25%, PoE (IEEE 802.3af) Power Consumption: Max 12W
Dimensions (Ø x H)	Φ 5.9" x 2.2"
Weight	1.25 lbs
Material	Metal + Plastic
Working Environment	-22°F - 140°F, Humidity: ≤95% RH
Storage Environment	-22°F - 140°F, Humidity: ≤95% RH
Surge Protection	4kv
Reset Button	Support

ADDITIONAL PRODUCTS

OPTIVIEW's VIDEO MONITORING SOFTWARE
Remote Monitoring

NVR64-8-NCV
64 Channel NDAA Compliant Raid NVR

IP160P-NCV
4MP Wide Angle Fixed Bullet Night Color Camera

IP4MIAB-28-AD-NCV
4MP Armor Ball Camera with Active Detterence

IP2MPTZ33-NCV
2MP 33X Starlight PTZ Camera

COMPATIBLE BRACKETS

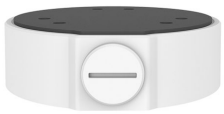

BKT-04
Junction Box for Armor Dome Cameras

BKT-P8-NCV
Dome Wall Mount for NDAA Compliant Cameras

MOUNTING OPTIONS

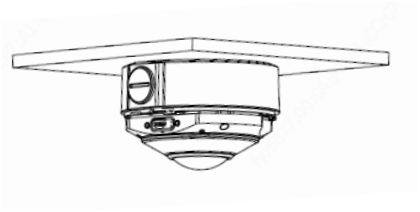

Junction Mount

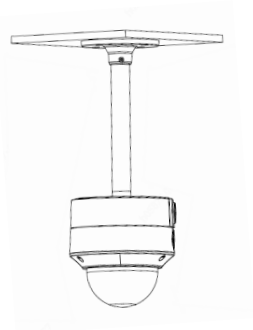

Indoor Pendant Mount
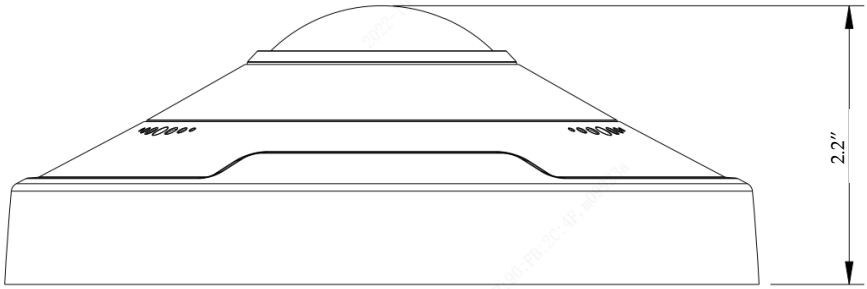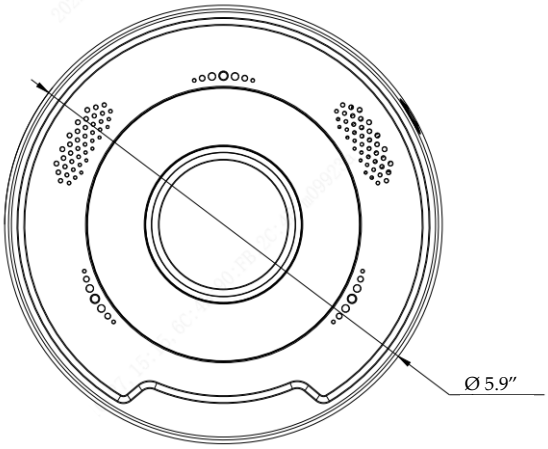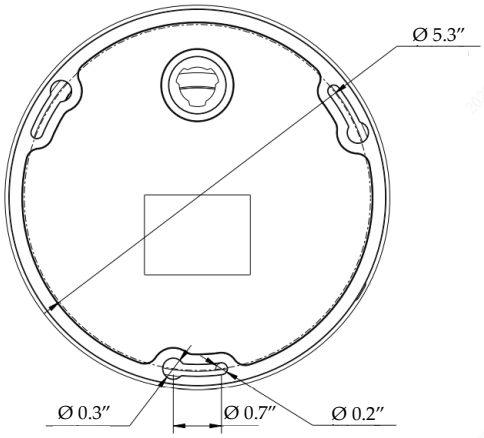
DIMENSIONS