OPTIVIEW

ANALYTICS

NIGHT COLOR

NDAA COMPLIANT

IP5MIAB-28-FC-NCV

5MP Network IR Fixed Armor Ball Camera with Full Color

5MP IP

Capture HD video footage with 5MP IP 2.8MM fixed lens with a maximum aperture of F1.0

Starlight

Advanced Starlight illuminates the darkness with a minimum of 0.001 LUX before IR turns on.

Smart Intrusion Prevention

Significantly reduce false alarms by accurately detection human and vehicle detection in zones.

121° View

Capture even more with an ultra-wide varifocal 121° view with no distortion.

Built-In Mic

The IP5MIAB-28-FC-NCV comes with a built in microphone to help you get even more data from every device.

ULTRA MOTION DETECTION

Utilizing machine learning and data intelligence, Ultra Motion Detection or UMD helps you filter out object based on motion detection, detecting motion of specified object types in the image, and trigger an alarm when such motion is detected. UMD supports two different object types: Person and Vehicle. UMD provides a detection rate of >90% up to 49ft and is more efficient than traditional motion detection, further reducing false-alarms.

BUILT-IN AUDIO

The IP5MIAB-28-FC-NCV comes with a built-in mic to help give you even more protection than a traditional still video.

SMART INTRUSION PREVENTION

Utilizing machine learning and data intelligence, Smart Intrusion Prevention or SIP helps reduce false-alarm rates by allowing you to set up Cross Line Detection, Intrusion Detection, as well as Enter / Leave Area, all which can do any combination of human/vehicle/non-motor vehicle recognition. Smart Intrusion Prevention's detection rate of >95% helps you improve your perimeter protection, reduce false alarms while keeping you informed about the events that matter the most to you.

AUTOMATIC NETWORK REPLENISHMENT (ANR) TECHNOLOGY

The IP5MIAB-28-FC-NCV when connected to an ANR compatible Network Video Recorder will automatically store video data on the internal memory card when the network is disconnected. After recovery to the network, the NVR automatically retrieves the video data stored on the camera.

IP5MIAB-28-FC-NCV

5MP Network IR Fixed Armor Ball Camera with Full Color

UP TO 98FT IR DISTANCE

The IP5MIAB-28-FC-NCV is capable of producing a stunningly clear, colorful video with low illuminance enhancement for darker environments. In the darkest environments, on board IR illumination kicks in. The IP5MIAB-28-FC-NCV provides clear video capture in both day and night with high definition video output.

ULTRA 265 COMPRESSION

Utilizing H.265 advanced video encoding, provides high-quality video while reducing the storage space needed to retain your video events. Users can add their own memory card to take advantage of its edge recording capabilities.

EDGE RECORDING

Optional edge recording with an optional memory slot expandable up to 256GB.

NDAA COMPLIANCE

The John S. McCain National Defense Authorization Act (NDAA) is a United States federal law which specifies the budget, expenditures and policies of the U.S. Department of Defense. For Fiscal Year 2019, the NDAA Section 889, prohibits the U.S. government from procuring video and telecommunication equipment from certain Chinese companies and their subsidiaries. Some non government projects may require NDAA compliance if federal funding is being used.

COMMERCIAL GRADE EQUIPMENT

Built for endurance, this all metal housing is rated IP67, which means it is protected from water and dust. Mount this camera anywhere with it's 3-axis cable management bracket. Additional junction boxes and brackets are available for additional installation options, and help further protect your cables and connections.

WIDE DYNAMIC RANGE

The camera achieves vivid images, even in the most intense contrast lighting conditions, using industry-leading wide dynamic range (WDR) technology. For applications with both bright and low lighting conditions that change quickly, True WDR (120 dB) optimizes both the bright and dark areas of a scene at the same time to provide usable video.

PRODUCT SPECIFICATIONS

CAMERA				
Sensor	1/2.7 5 .0 megapixel, progressive scan, CMOS			
Lens	2.8mm @ F1.0			
DORI Distance	Detect	Observe	Recognize	Identify
	206.7ft	82.7ft	41.3ft	20.7ft
Angle of View (H)	102.0°			
Angle of View (V)	53.4°			
Angle of View (O)	121.0°			
Adjustment Angle	Pan: 3° ~ 360°, Tilt: 0° ~ 80°, Rotate: 3° ~ 360°			
Shutter	Auto/Manual, 1 1/100000 s			
Minimum Illumination	Colour: 0.001 Lux (F1. 0 , AGC)			
S/N	>56dB			
Defog	Digital Defog			
WDR	120dB			
LEDs Number	2			
LED Distance	Up to 98ft			

VIDEO	
Video Compression	Ultra265, H.265, H.264, MJPEG
H.264 code profile	Baseline Profile, Main Profile, High Profile
Frame Rate	Main Stream: 5MP (2880*1620), Max 30fps; 4MP (2560*1440), Max 30fps;3MP (2304*1296), Max 30fps; 2MP (1920*1080), Max 30fps; Sub Stream: 720P (1280*720), Max 30fps; D1 (720*576), Max 30fps; 640*360, Max 30fps; 2CIF (704*288), Max 30fps; CIF (352*288), Max 30fps; Third Stream: D1 (720*576), Max 30fps; 640*360, Max 30fps; 2CIF (704*288), Max 30fps; CIF (352*288), Max 30fps;
Video Bit Rate	128 Kbps ~ 16 Mbps
9:16 Corridor Mode	Supported
OSD	Up to 8 OSDs
Privacy Mask	Up to 4 areas
ROI	Up to 8 areas

IP5MIAB-28-FC-NCV

5MP Network IR Fixed Armor Ball Camera with Full Color

PRODUCT SPECIFICATIONS CONT.

IMAGE	
White Balance	Auto / Outdoor / Fine Tune / Sodium Lamp / Locked / Auto2
Digital noise reduction	2D/3D DNR
Smart Illumination	Support
Flip	Normal / Vertical / Horizontal / 180° / 90°Clockwise / 90°Anti-clockwise
Dewarping	N\A
HLC	Support
BLC	Support
Image Setting	Image rotation, brightness, saturation, contrast, sharpness, gain adjustable by web browser

INTELLIGENT	
Smart Intrusion Prevention	Support False Alarm Filtering: Line Crossing Detection, Intrusion Detection, Region Entrance Detection, Region Exit Detection
Statistical Analysis	People Counting, Support Tripwire People Counting And Area People Counting

EVENTS	
Basic Detection	Motion Detection, Ultra Motion Detection, Human Detection, Vehicle Detection, Non-Motor Vehicle Detection Tampering Alarm, Audio Detection
General Function	Watermark, IP Address Filtering, Tampering Alarm, Access Policy, ARP Protection, RTSP Authentication, User Authentication

AUDIO	
Audio Compression	G.711
Suppression	Supported
Sampling Rate	8KHZ

STORAGE	
Edge Storage	Optional Memory Card up to 256GB
Network Storage	ANR, NAS(NFS)

NETWORK	
Protocols	IPv4, IGMP, ICMP, ARP, TCP, UDP, DHCP, PPPoE, RTP, RTSP, RTCP, DNS, DDNS, NTP, FTP, UPnP, HTTP, HTTPS, SMTP, 802.1x, SNMP, QoS

NETWORK CONT.	
Compatible Integration	ONVIF (Profile S, Profile G, Profile T), API
Client	Optiview VMS-N
Web Browser	Plug-in required live view: IE9+, Chrome 41 and below, Firefox 52 and below
	Plug-in free live view: Chorme 57.0+, Firefox 58.0+, Edge 16+, Safari 11+

INTERFACE	
Built-in Mic	Supported
Network	1 RJ45 10M/100M Base-TX Ethernet
Built-In Speaker	N / A

CERTIFICATIONS	
Certifications	FCC CFR 47 Part 15 EN 55032:2015 EN 55024:2010 EN 61000-3-2:2014 EN 61000-3-3-2013 IEC 62368-1 EN 62368-1

GENERAL	
Power	DC 12V±25%, PoE (IEEE 802.3af)
	Power consumption: Max 7.5W
Dimensions (Ø x H)	Ø4.4" x 3.7"
Net Weight	0.97lb
Material	Metal
Working Environment	-22°F ~ 140°F, Humidity: ≤95% RH (non-condensing)
Strorage Environment	-22°F ~ 140°F, Humidity: ≤95% RH (non-condensing)
Surge Protection	2KV
Ingress Protection	IP67

IP5MIAB-28-FC-NCV

5MP Network IR Fixed Armor Ball Camera with Full Color

ADDITIONAL PRODUCTS

NVR16P164K-2-NCV
16 Channel 16 PoE 4K NDAA Compliant NVR

Memory Card
256GB Generic Memory Card for Edge Recording

IP4MIAB-28-SDA-NCV
4MP NDAA Compliant Fixed Armor Ball Camera

IP5MIBC-28-SDA-NCV
5MP NDAA Compliant Fixed Bullet Camera

IP2MPTZ33-NCV
2MP NDAA Compliant 33X Starlight PTZ
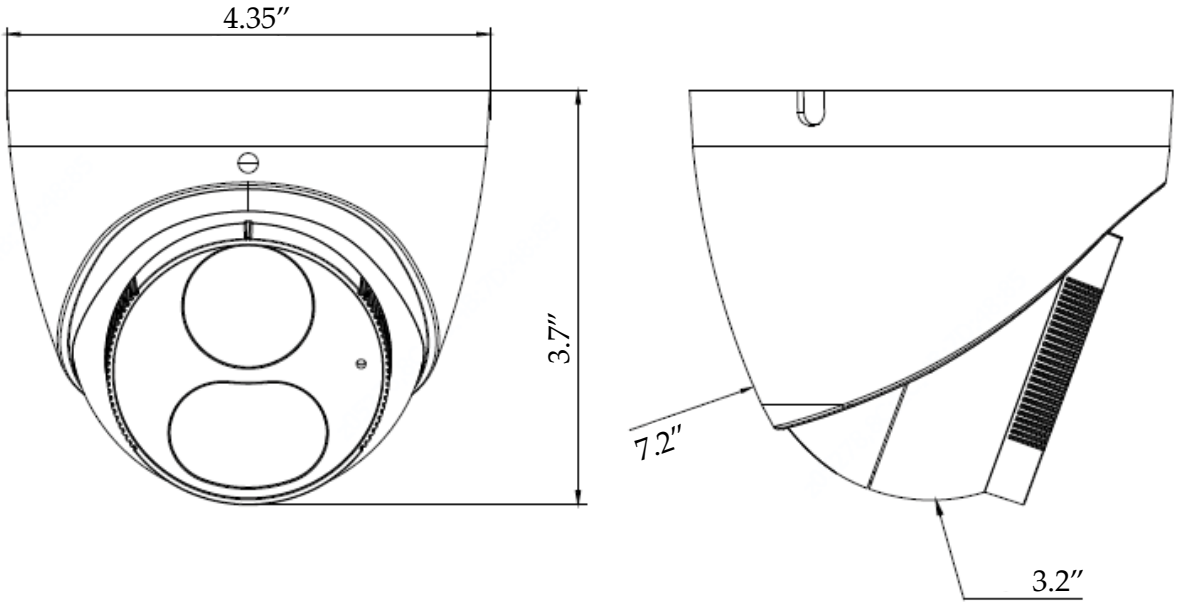
DIMENSIONS