OPTIVIEW

ANALYTICS

NDAA COMPLIANT

IP8MIAB-28-SDAI-NCV

4K Network IR Armor Ball Camera with Built-in Audio

4K IP

Capture HD video footage with 8MP IP 2.8 fixed lens with a maximum aperture of F2.0

Smart Intrusion Prevention

Significantly reduce false alarms by accurately detection human and vehicle detection in zones.

People Counting

Detect and track targets using Optiview's advanced image technology by with up to 4 customizable areas.

112° View

Capture even more with an ultra-wide varifocal 112° view with no distortion.

Built-In Mic

The IP8MIAB-28-SDAI-NCV comes with a built-in microphone to help you get even more data from every device.

4K RESOLUTION

4K resolution captures images four times the pixel density of 1080P which means that the finer details, such as faces or smaller items can be viewed with more detail than traditional 1080P surveillance.

FACE CAPTURE

Face capture automatically detects faces and automatically takes a snapshot. When paired with a recorder, the face snapshot can then be analyzed for specific face detection characteristics and compare against an internally managed face database to trigger alerts based on allow and block lists.

SMART INTRUSION PREVENTION

Utilizing machine learning and data intelligence, Smart Intrusion Prevention or SIP helps reduce false-alarm rates by allowing you to set up Cross Line Detection, Intrusion Detection, as well as Enter / Leave Area, all which can do any combination of human/ vehicle/non-motor vehicle recognition. Smart Intrusion Prevention's detection rate of >95% helps you improve your perimeter protection, reduce false alarms while keeping you informed about the events that matter the most to you.

PEOPLE COUNTING

The IP8MIAB-28-SDAI-NCV detects and tracks target by using advanced image processing technology and deep learning algorithm. You can draw 4 polygon areas, and count people in each area; When the number of the people in the area is greater than or equal to/lower than or equal to the defined threshold, the alarm will be triggered.

IP8MIAB-28-SDAI-NCV

4K Network IR Armor Ball Camera with Built-in Audio

ULTRA MOTION DETECTION

Utilizing machine learning and data intelligence, Ultra Motion Detection or UMD helps you filter out objects based on motion detection, detecting motion of specified object types in the image, and trigger an alarm when such motion is detected. UMD supports two different object types: Person and Vehicle. UMD provides a detection rate of >90% up to 49ft and is more efficient than traditional motion detection, further reducing false-alarms. Ultra Motion Detection can be configured to your full screen or specific area(s) for detection.

BUILT-IN MIC

The IP8MIAB-28-SDAI-NCV comes with a built-in mic to help give you even more protection than a traditional still video.

UP TO 98FT IR DISTANCE

The IP8MIAB-28-SDAI-NCV is capable of producing a stunningly clear, colorful video with low illuminance enhancement for darker environments. In the darkest environments, on board IR illumination kicks in. The IP8MIAB-28-SDAI-NCV provides clear video capture in both day and night with high definition video output.

AUTOMATIC NETWORK REPLENISHMENT (ANR) TECHNOLOGY

The IP8MIAB-28-SDAI-NCV when connected to an ANR compatible Network Video Recorder will automatically store video data on the internal memory card when the network is disconnected. After recovery to the network, the NVR automatically retrieves the video data stored on the camera.

WIDE DYNAMIC RANGE

The camera achieves vivid images, even in the most intense contrast lighting conditions, using industry-leading wide dynamic range (WDR) technology. For applications with both bright and low lighting conditions that change quickly, True WDR (120 dB) optimizes both the bright and dark areas of a scene at the same time to provide usable video.

CORRIDOR MODE

This new feature allows to applying 9:16 ratio mode instead of the traditional 16:9 ratio. This “corridor mode: actively doubles the standard monitoring area being especially useful for long narrow spaces like hallways.

ULTRA 265 COMPRESSION

Utilizing H.265 advanced video encoding, provides high-quality video while reducing the storage space needed to retain your video events. Users can add their own memory card to take advantage of its edge recording capabilities.

EDGE RECORDING

Optional edge recording with an optional memory slot expandable up to 256GB.

COMMERCIAL GRADE EQUIPMENT

Built for endurance, this all metal housing is rated IP67, which means it is protected from water and dust. Additional junction boxes and brackets are available for additional installation options, and help further protect your cables and connections.

NDAA COMPLIANCE

The John S. McCain National Defense Authorization Act (NDAA) is a United States federal law which specifies the budget, expenditures and policies of the U.S. Department of Defense. For Fiscal Year 2019, the NDAA Section 889, prohibits the U.S. government from procuring video and telecommunication equipment from certain Chinese companies and their subsidiaries. Some non government projects may require NDAA compliance if federal funding is being used.

IP8MIAB-28-SDAI-NCV

4K Network IR Armor Ball Camera with Built-in Audio

PRODUCT SPECIFICATIONS

CAMERA				
Sensor	1/2.7", 8.0 megapixel, progressive scan, CMOS			
Lens	2.8mm @ F2.0			
DORI Distance	Detect	Observe	Recognize	Identify
	275ft	110ft	55ft	27ft
Angle of View	112.4° (H) x 60.1° (V) x 146.1° (O)			
Adjustment Angle	Pan: 3° ~ 360° Tilt: 0° ~ 80° Rotate: 3° ~ 360°			
Shutter	Auto / Manual, 1 ~ 1/100000s			
Minimum Illumination	Colour: 0.01Lux (F2.0, AGC ON) 0Lux with IR on			
Digital Noise Reduction	2D / 3D DNR			
Day / Night	IR-cut filter with auto switch (ICR)			
S/N	>56dB			
IR Range	Up to 98 ft IR range			
Wavelength	850nm			
IR On / Off Control	Auto / Manual			
Defog	Digital Defog			
WDR	120dB			

VIDEO	
Video Compression	Ultra 265, H.265, H.264, MJPEG
H.264 Code Profile	Baseline profile, Main profile, High profile
Frame Rate	Main Stream: 8MP (3840*2160), Max 20fps; 5MP (3072*1728), Max 30fps; 4MP (2560*1440), Max 30fps; 1080P (1920*1080), Max 30fps; Sub Stream: 1080P (1920*1080), Max 30fps;720P (1280*720), Max 30fps; D1 (720*576), Max 30fps; 640*360,Max 30fps; 2CIF(704*288), Max 30fps; CIF(352*288), Max 30fps; Third Stream: D1 (720*576), Max 30fps; 640*360,Max 30fps; 2CIF(704*288), Max 30fps; CIF(352*288), Max 30fps;
Video Bit Rate	128 Kbps ~ 16 Mbps
OSD	Up to 8 OSDs
Privacy Mask	Up to 4 areas
ROI	Up to 8 areas
Motion Detection	Up to 4 areas

IMAGE	
White Balance	Auto / Outdoor / Fine Tune / Sodium Lamp / Locked / Auto2
Smart IR	Support
Flip	Normal / Vertical / Horizontal / 180° / 90° Clockwise / 90° Anti-clockwise
Corridor Mode	Supported
Dewarping	Supported
HLC	Supported
BLC	Supported

INTELLIGENT	
Smart Intrusion Prevention	Support False Alarm Filtering: Cross Line Detection, Intrusion Detection, Enter Area Detection, Leave Area Detection
Statistical Analysis	People Counting, Support People Flow Counting And Crowd Density Monitoring

EVENTS	
Basic Detection	Motion Detection, Ultra Motion Detection, Tampering Alarm, Audio Detection
General Function	Watermark, IP Address Filtering, Access Policy, ARP Protection, RTSP Authentication, User Authentication

AUDIO	
Audio Compression	G.711
Suppression	Supported
Sampling Rate	8KHZ

NETWORK	
Protocols	IPv4, IGMP, ICMP, ARP, TCP, UDP, DHCP, PPPoE, RTP, RTSP, RTCP, DNS, DDNS, NTP, FTP, UPnP, HTTP, HTTPS, SMTP, 802.1x, SNMP, QoS
Compatible Integration	ONVIF (Profile S, Profile G, Profile T), API
Client	**Desktop:** Optiview VMS-N **Mobile:** Optiview VMSN **Cloud:** Optiview Cloud VCS
Web Browser	Plug-in required live view: IE9+, Chrome 41 and below, Firefox 52 and below
	Plug-in free live view: Chorme 57.0+, Firefox 58.0+, Edge 16+, Safari 11+

IP8MIAB-28-SDAI-NCV

4K Network IR Armor Ball Camera with Built-in Audio

PRODUCT SPECIFICATIONS CONT.

STORAGE	
Edge Storage	Memory Card up to 256GB
Network Storage	ANR

INTERFACE	
Network	1 RJ45 10M/100M Base-TX Ethernet
Built-In Mic	Supported

CERTIFICATIONS	
Certifications	CE: EN 60950-1 UL: UL60950-1 FCC: FCC Part 15

GENERAL	
Power	DC 12V±25%, PoE (IEEE 802.3af) Power consumption: Max 5.0W
Dimensions (L × W × H)	Φ4.4" x 3.7"
Net Weight	0.97lb
Material	Metal
Working / Storage Environment	-22°F ~ 140°F, Humidity: ≤95% RH (non-condensing)
Surge Protection	2KV
Ingress Protection	IP67
Reset Button	N/A

ADDITIONAL PRODUCTS

BKT-05
Mounting Bracket

IP4MIAD-212-Z-NCV
4MP NDAA Compliant Armor Dome Camera

NVR16P164K-2-NCV
16 Channel 16 PoE 4K NDAA Compliant NVR

Memory Card
256GB Generic Memory Card for Edge Recording

AP5GV3
5.8 GHZ Wireless Bridge
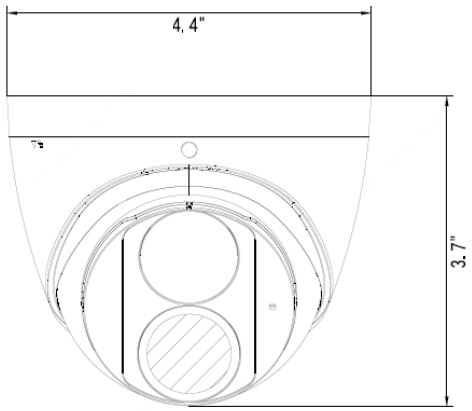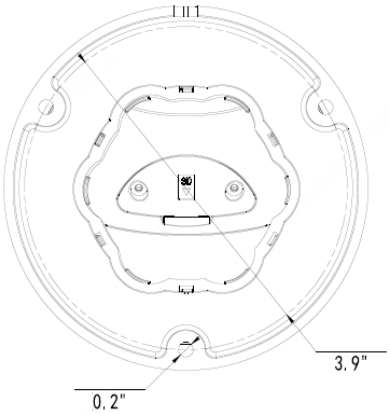
DIMENSIONS